SC20 Mast Mount Fixing Dimensions

For help & information
email: sales@scanstrut.com
tel: +44 (0) 1392 531280

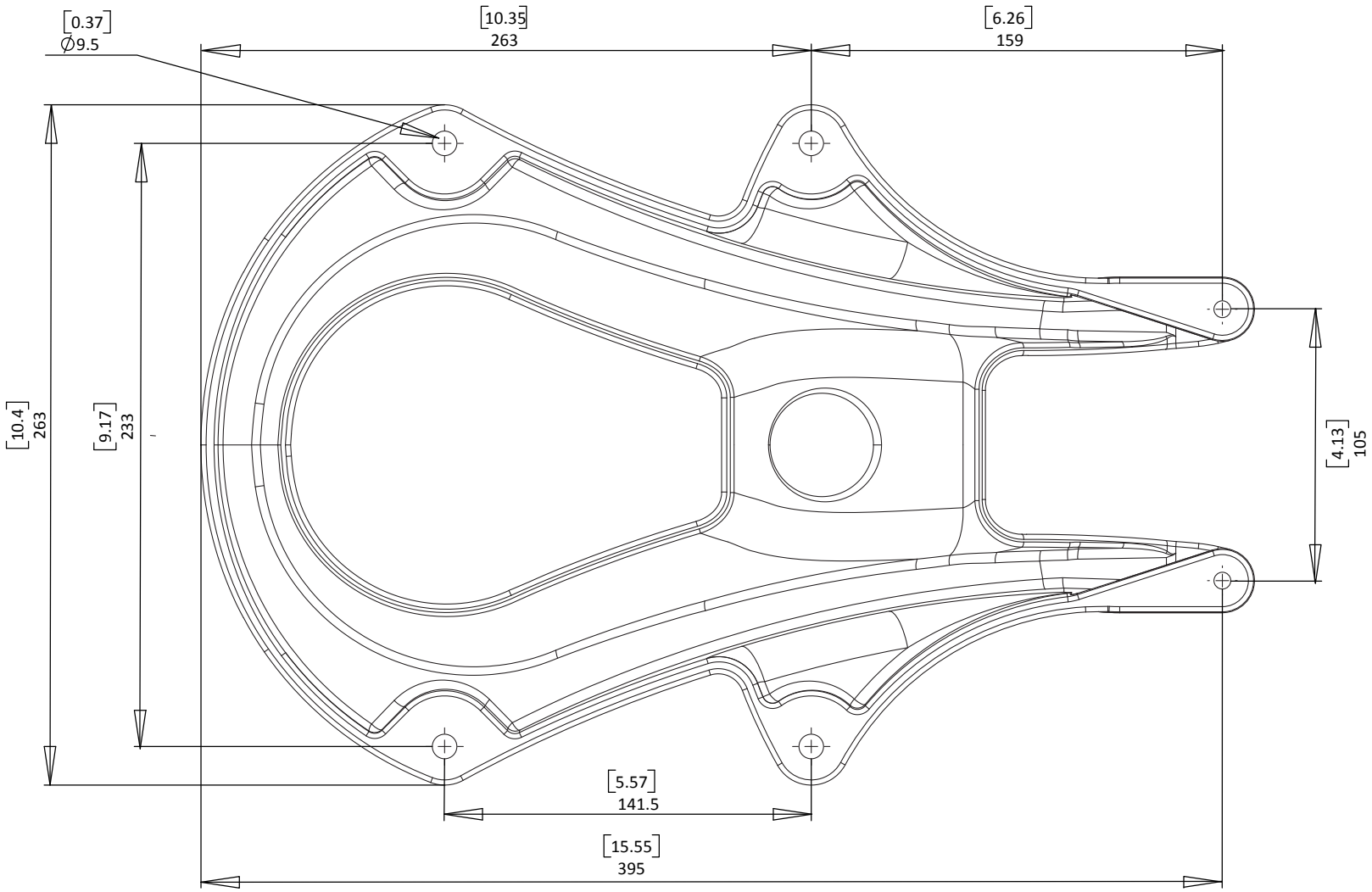

SCANSTRUT
designed for life at sea